ECOLITE ROUND

Self-standing and Wall-mounted Convector Heaters

New series of convectors with rounded edges. Their elegant look can be used in both modern and historic buildings but also where itsrounded shapeprovides a prevention of injury: nurseries, schools and health facilities.

◂ TZK 0200 0198 1200

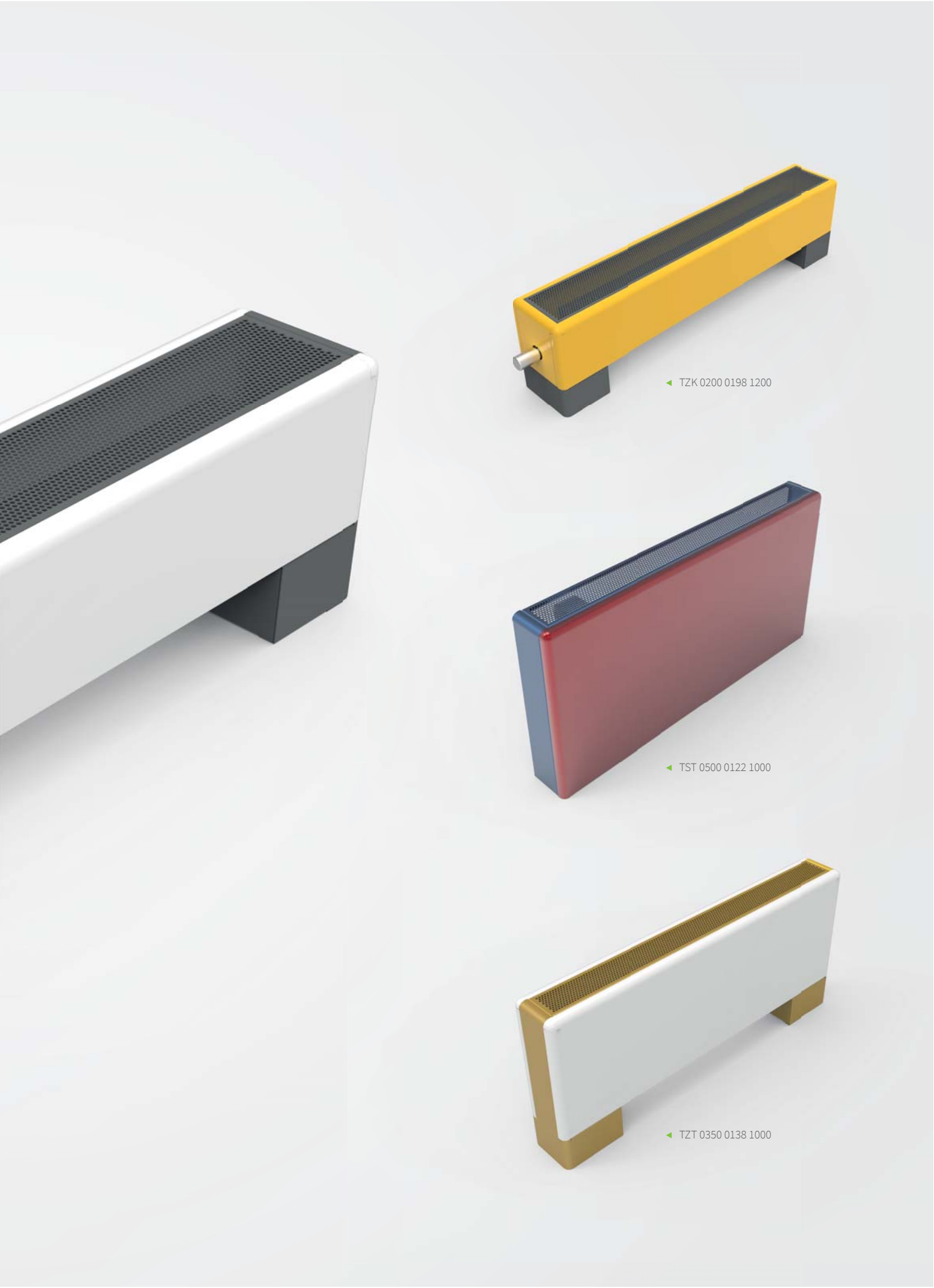
TZK 0200 0198 1200
TST 0500 0122 1000
TZT 0350 0138 1000

TZT Fan-operated self-standing convector heaters

Convector heaters equipped with a fan are suitable for low-temperature heating systems. Their heat output is sufficient even with low inlet temperatures of the heating fluid supplied by heat pumps. The rounding not only enhances the aesthetic appearance of the units, but it also improves safety in exposed areas. They are installed in schools, preschools and other buildings where increased safety is a concern.

The fan speed is continuously controlled by a thermostat, while the convector heater promptly responds to temperature variations in the room and ensures thermal comfort.

- Passive and low-energy houses
- Shopping malls, airport lounges
- Schools, preschools
- Hospitals, retirement homes
- Institutions for people with reduced mobility
- Hotels
- Entrance areas, lobbies

Standard Equipment

Cover	surface-treated steel sheet metal with an epoxy polyester powder coating
Grille	round or rectangular holes as per order specifications; grille is securely attached to the cover
Heat-exchanger	black painted Al-Cu lamellar heat-exchanger with a air vent valve, 2 × G1/2" inner threads
Fan	Modern tangential fan with 24 V DC EC motor with high efficiency, rotors protection
Valve	corner thermostatic valve, M30 x 1.5 thread with a 2.5 mm pitch
Mounting	floor anchor stands as per order specifications

Operating Conditions

Max. operating temp.	110°C
Max. operating excess pressure	1 MPa (10 bar)
Protection	IP20
Ambient conditions	temperature T = +2 to +40°C humidity Rh = 20 to 70%
Operating voltage	24 V DC

Convector Heater Options and Size Variations

Standard valve connection V

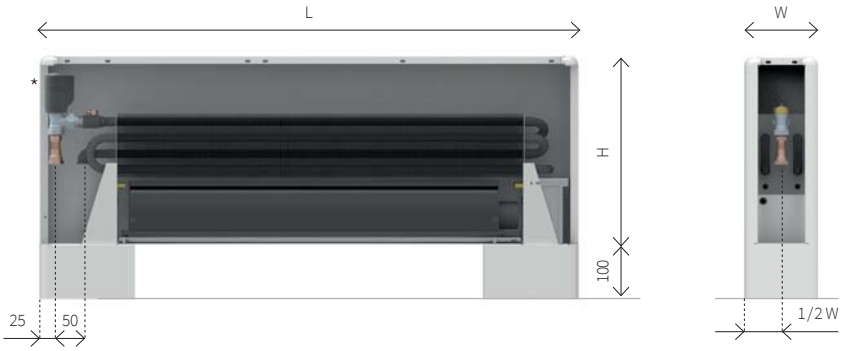

* electrothermal actuator not supplied with the heater

Convector heater size variations

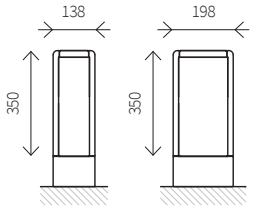

Height H [mm]	350
Width W [mm]	138 198
Length L [mm]	700-2 600

Energy saving

Fan convectors operate on safe voltage of 24 V DC. The fan motors have very low consumption of electric power. The speed of fans is continuously commanded by controlling voltage of 0...10 V DC.

Component parts of the convector heater

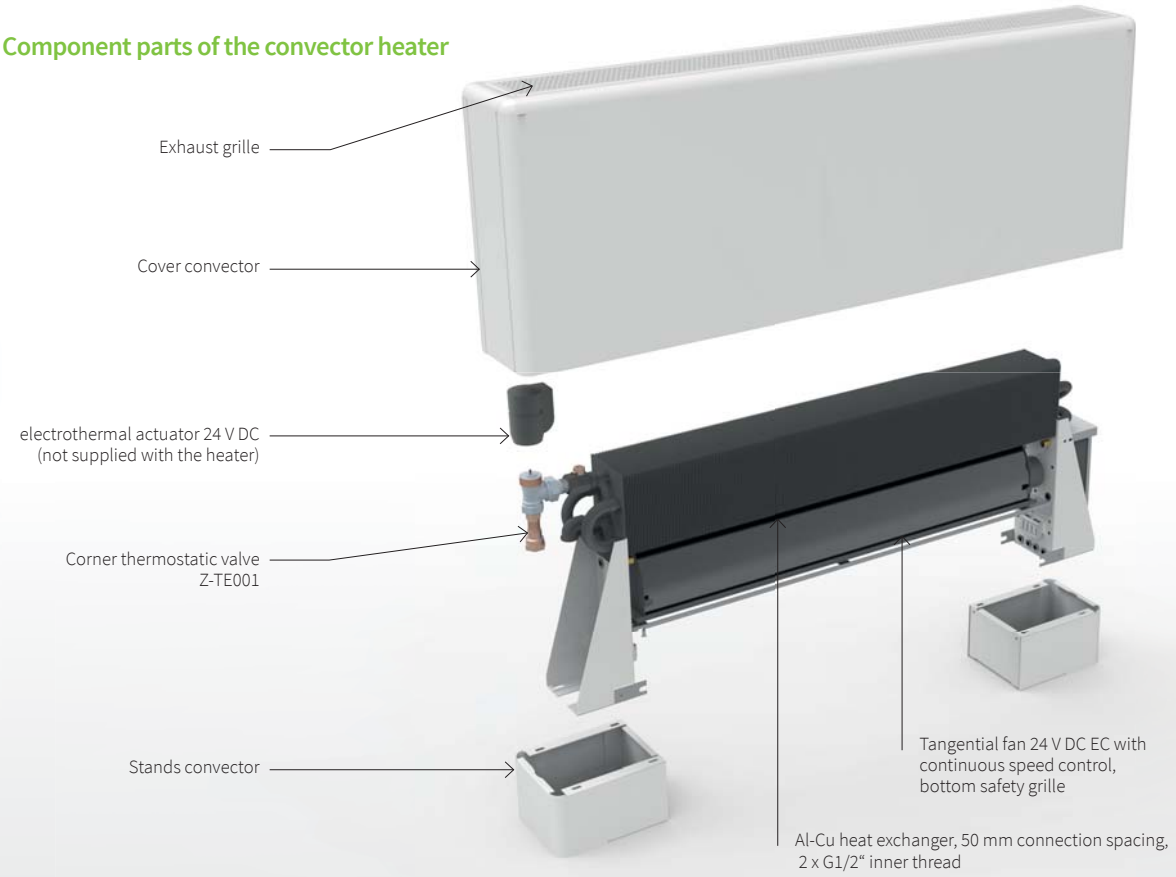

Accessories

▸ Details of accessories on the page 8

Grilles

Grille R
- rectangular holes

Grille C
- round holes

tip Order grilles and stands in colours that vary from the cover to brighten up your interior

▸ Colour design options and grille details, page 5

Stands

Stand S
- self-standing model
- cover water piping
- height 100 mm

Number of stands as per the body length

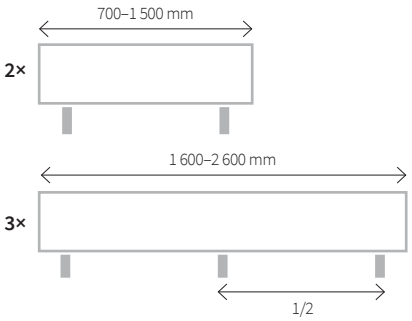

Coding

TZT	0350	0138	0400	C	01	R	1	V	L	S	
Model	**Height H**	**Width W**	**Length L**	**Material**	**Colour**	**Grille**	**Grille colour**	**Connection type**	**Connection side**	**Stands**	**Atypical**
TZT	0350 mm	0138 mm 0198 mm	700 mm 1 000 mm 1 200 mm ... 2 400 mm 2 600 mm	**C** Sheet steel with surface finish and an epoxy polyester powder coating	As per RAL colour chart Structured colours Metallic paint colours See colour chart, page 57	**R** rectangular holes **C** round holes	**1** Same as cover colour **9** Grille in different colour	**V** With corner thermo-static valve, bottom connection, 50 mm spacing	**L** Left side **R** Right side	**S** water piping cover	Empty position for standard **A** In non-standard heater configu-rations

▸ Other options, see page 59

TZT - Fan-operated self-standing convectors heating output

Width 138 mm

75/65/20°C	Speed [-] / Heating output [W]				
Length [mm]	0	1	2	3	4 max
700	243	685	912	1 144	1 313
1000	401	1 381	1 838	2 305	2 645
1200	507	1 814	2 415	3 028	3 475
1400	612	2 218	2 951	3 701	4 247
1600	718	2 500	3 327	4 173	4 788
1800	823	2 762	3 676	4 610	5 290
2000	929	3 195	4 252	5 333	6 120
2200	1 034	3 629	4 829	6 057	6 950
2400	1 140	4 032	5 366	6 730	7 723
2600	1 245	4 435	5 902	7 403	8 495

Exponent n = 1,065

55/45/20°C	Speed [-] / Heating output [W]				
Length [mm]	0	1	2	3	4 max
700	141	398	529	664	762
1000	233	802	1 067	1 338	1 535
1200	294	1 053	1 401	1 758	2 017
1400	355	1 287	1 713	2 148	2 465
1600	416	1 451	1 931	2 422	2 779
1800	478	1 603	2 133	2 676	3 070
2000	539	1 855	2 468	3 096	3 552
2200	600	2 106	2 803	3 515	4 034
2400	661	2 340	3 114	3 906	4 482
2600	723	2 574	3 426	4 297	4 930

Width 198 mm

75/65/20°C	Speed [-] / Heating output [W]				
Length [mm]	0	1	2	3	4 max
700	385	849	1 118	1 367	1 567
1000	636	1 710	2 252	2 755	3 158
1200	803	2 247	2 958	3 620	4 149
1400	971	2 746	3 616	4 424	5 071
1600	1 138	3 095	4 076	4 987	5 717
1800	1 305	3 420	4 503	5 510	6 316
2000	1 473	3 957	5 210	6 375	7 307
2200	1 640	4 493	5 917	7 239	8 298
2400	1 808	4 993	6 574	8 044	9 220
2600	1 975	5 492	7 232	8 848	10 142

Exponent n = 1,148

55/45/20°C	Speed [-] / Heating output [W]				
Length [mm]	0	1	2	3	4 max
700	214	472	622	761	872
1000	354	951	1 253	1 533	1 757
1200	447	1 250	1 646	2 014	2 308
1400	540	1 528	2 012	2 461	2 821
1600	633	1 722	2 268	2 774	3 180
1800	726	1 903	2 505	3 065	3 514
2000	819	2 201	2 899	3 546	4 065
2200	912	2 500	3 292	4 027	4 616
2400	1 006	2 777	3 657	4 475	5 129
2600	1 099	3 055	4 023	4 922	5 642

TZT - Heating output recalculation for another temperature gradient

To obtain the heating output for a different temperature gradient multiply heating output value at 75/65/20 ° C by the below mentioned factor **f**.

Example
Heating output of the convector TZT 0350 0138 1200 or temperature gradient 70/55°C
1. Output 75/65/20 ° C =1814 W
2. Factor from the table for 70/55/20 ° C at 138 width: f = 0,841
3. Output 70/55/20 ° C = f x 1814 = 1526 W

Height [mm]	90/70 °C	82/71 °C	70/55 °C	70/50°C	50/40 °C
0350 0138	1,214	1,139	0,841	0,771	0,471
0350 0198	1,233	1,151	0,830	0,755	0,444

Room temperature 20 °C

Recalculation to other temperature gradients

Convector heating output reckoning follows by recalculation of the standardized output Qn 75/65/20 °C

Q = Qn*Ψ*(ΔT/50)^n [W]; where ΔT = ((T1+T2)/2)−Ti [°C]

Qn [W]	heating output for temperature gradient
Ψ [-]	mass rate of flow coefficient (for current flow rate Ψ = 1)
T1 [°C]	input water temperature
T2 [°C]	output water temperature
Ti [°C]	temperature in the room
n [-]	temperature exponent

Heating water flow rate through exchanger

To reach the required heating output we determine the desired flow of heating water through the convector exchanger. We calculate it from heating output of the convector for the selected input and output temperatures of heating water.

M = 0,86 * Q / (T1-T2) [kg / h]

M [kg/h]	mass rate of flow, heating water flowing through exchanger
Q [W]	convector heating output
T1-T2 [°C]	difference between input and output temperature
0,86	invariable for recalculation of units

Table of hydraulic parameters of exchangers

For hydraulic parameters of exchangers see the page 48.

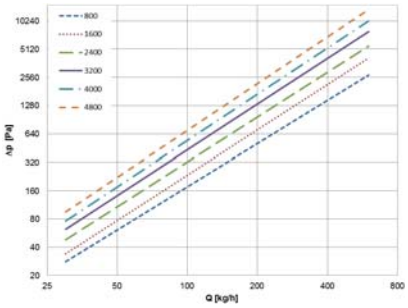

Acoustic pressure [dB(A)]

Length [mm]	Speed [-] / Acoustic pressure [dB(A)]				
	0	1	2	3	4 max
700	-	<20	27	37	45
1000	-	22	30	40	45
1200	-	22	31	41	45
1400	-	22	31	41	45
1600	-	23	32	42	46
1800	-	24	33	43	47
2000	-	25	33	43	48
2200	-	26	34	44	49
2400	-	27	35	45	50
2600	-	28	36	46	51

Fans input power [W]

Length [mm]	Speed [-] / Fans input power [W]				
	0	1	2	3	4 max
700	-	1 W	2 W	3 W	5 W
1000	-	2 W	3 W	6 W	9 W
1200	-	2 W	3 W	6 W	9 W
1400	-	3 W	6 W	10 W	17 W
1600	-	3 W	5 W	10 W	14 W
1800	-	4 W	6 W	12 W	17 W
2000	-	4 W	6 W	12 W	17 W
2200	-	4 W	7 W	13 W	18 W
2400	-	5 W	9 W	16 W	25 W
2600	-	6 W	11 W	20 W	33 W

* Approximate fan input powers /When using electrothermal actuator add in the convector's power 3 W

Atypical convector heaters

Design modifications of wall-mounted convector heaters

The design of convector heaters can be modified to meet your requirements. You can select from different grille setting options in the cover or models with the casing extended to the floor. Below are presented some basic modifications; for more options contact our Sales Department.

STANDARD DESIGN
LSK, TSK

The most common variation of a wall-mounted heat convector. The heaters look identical to panel radiators on the outside. A bottom protective grille is available to prevent tampering with convector heater components.

Coefficient **k = 1,00**

FORWARD EXHAUST
LDK, TDK

Convector heaters with a forward facing exhaust are often placed in environments with stricter hygiene requirements. It effectively prevents dust from entering the heater and accumulating on the heat-exchanger. The flat upper cover can be easily cleaned with a dust cloth. A bottom protective grille is available to prevent tampering with convector heater components.

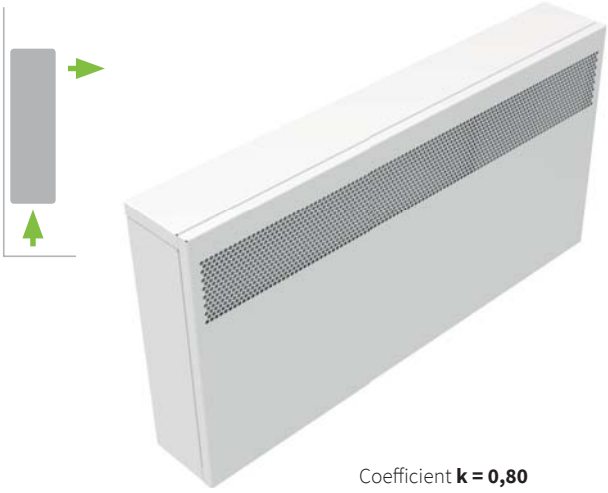

Coefficient **k = 0,80**

Coefficient **k** for recalculating heating output of modified convector versions. Multiply heating output by the mentioned coefficient.

Additional design variations

Front panel print design

The front panel can be adorned with a print design, giving free reign to imagination. Potential applications include photographs, logos, art work reproductions, various structures and geometric patterns, etc. There are no limits to creativity. The designer convector heater is ideal for both residential and public settings.

Ordering a decorative cover radiator:

E-mail us your graphic design, in the highest resolution possible. You will then be contacted for confirmation of the resolution, appearance, size and date of delivery. After this, manufacture of the heater will proceed and you will receive updated delivery information.

Atypical convector heaters

Design modifications of wall-mounted convector heaters

CASING EXTENDED TO THE FLOOR
LGK, TGK

A compact-looking unit with its casing extended to the floor. The heater seems to be standing directly on the floor. All internal components and connection piping are safely covered. The casing can be removed for cleaning purposes.

Coefficient **k = 0,86**

CASING EXTENDED TO THE FLOOR AND A FORWARD EXHAUST
LFK, TFK

This model combines the advantages of a full-height casing, with all internal components safely covered, and a forward-facing outlet which prevents accumulation of falling dust. Select the model with rounded corners for added safety.

Coefficient **k = 0,63**

Additional design variations

Convector heater with an integrated voltage supply LZP, TZP, LSP, TSP

In larger projects where simultaneous control of multiple convector heaters is required and individual cabling lengths are in tens of meters, it is advantageous to use convectors with an installed voltage supply. There is no need to dimension the network based on the power input as all convector heaters are powered by their own integrated voltage supply. It also provides a practical solution in projects where the final number of heaters in individual rooms is not known until the very last moment (e.g. when renting out floor space in shopping centers). The connection can be modified as required, while individual units can be readily separated and fitted with a thermostat.

Pressure loss for self-standing models

LZK, TZK width 138 mm / height 90 mm

Length [mm]	Volume [l]	M – mass rate of flow in piping (kg/h) / R – hydraulic loss in exchanger (kPa)									
		M = 40	60	80	100	150	200	250	300	350	400
600	0,2	0,003	0,008	0,017	0,029	0,075	0,146	0,243	0,367	0,519	0,700
800	0,4	0,005	0,012	0,023	0,038	0,094	0,177	0,289	0,430	0,600	0,802
1000	0,5	0,007	0,016	0,030	0,048	0,113	0,209	0,335	0,492	0,681	0,903
1200	0,6	0,009	0,020	0,036	0,057	0,133	0,240	0,381	0,554	0,762	1,004
1400	0,6	0,011	0,024	0,043	0,067	0,152	0,271	0,426	0,617	0,843	1,106
1600	0,7	0,012	0,028	0,049	0,076	0,171	0,303	0,472	0,679	0,924	1,207
1800	0,8	0,014	0,032	0,056	0,086	0,190	0,334	0,518	0,742	1,005	1,309
2000	0,9	0,016	0,036	0,062	0,095	0,209	0,365	0,564	0,804	1,086	1,410
2200	1,1	0,018	0,040	0,068	0,105	0,228	0,397	0,610	0,867	1,167	1,512
2400	1,2	0,020	0,043	0,075	0,114	0,247	0,428	0,656	0,929	1,249	1,613
2600	1,3	0,022	0,047	0,081	0,124	0,266	0,459	0,701	0,992	1,330	1,714
2800	1,4	0,024	0,051	0,088	0,133	0,286	0,491	0,747	1,054	1,411	1,816

LZK, TZK width 198 mm / height 90 mm

Length [mm]	Volume [l]	M – mass rate of flow in piping (kg/h) / R – hydraulic loss in exchanger (kPa)									
		M = 40	60	80	100	150	200	250	300	350	400
600	0,5	0,001	0,004	0,008	0,013	0,032	0,059	0,096	0,143	0,198	0,263
800	0,7	0,003	0,007	0,012	0,020	0,046	0,082	0,130	0,189	0,258	0,338
1000	0,9	0,004	0,010	0,017	0,027	0,059	0,105	0,164	0,235	0,318	0,414
1200	1,2	0,006	0,012	0,022	0,033	0,073	0,128	0,197	0,281	0,379	0,490
1400	1,2	0,007	0,015	0,026	0,040	0,087	0,150	0,231	0,327	0,439	0,566
1600	1,4	0,008	0,018	0,031	0,047	0,101	0,173	0,265	0,373	0,499	0,641
1800	1,6	0,010	0,021	0,036	0,054	0,115	0,196	0,298	0,419	0,559	0,717
2000	1,8	0,011	0,024	0,040	0,061	0,129	0,219	0,332	0,465	0,619	0,793
2200	2,1	0,013	0,027	0,045	0,068	0,143	0,242	0,365	0,511	0,679	0,869
2400	2,3	0,014	0,029	0,050	0,075	0,157	0,265	0,399	0,557	0,739	0,944
2600	2,5	0,015	0,032	0,054	0,082	0,171	0,288	0,433	0,603	0,799	1,020
2800	2,8	0,017	0,035	0,059	0,088	0,184	0,311	0,466	0,649	0,860	1,096

LZK, TZK width 258 mm / height 90 mm

Length [mm]	Volume [l]	M – mass rate of flow in piping (kg/h) / R – hydraulic loss in exchanger (kPa)									
		M = 40	60	80	100	150	200	250	300	350	400
600	0,6	0,010	0,022	0,038	0,058	0,128	0,225	0,346	0,493	0,664	0,859
800	0,8	0,013	0,029	0,050	0,077	0,167	0,289	0,441	0,623	0,835	1,076
1000	1,1	0,017	0,037	0,063	0,096	0,205	0,353	0,535	0,754	1,007	1,293
1200	1,4	0,021	0,044	0,076	0,115	0,244	0,416	0,630	0,884	1,178	1,510
1400	1,4	0,025	0,052	0,088	0,133	0,282	0,480	0,725	1,015	1,349	1,727
1600	1,7	0,028	0,060	0,101	0,152	0,320	0,544	0,819	1,146	1,521	1,944
1800	1,9	0,032	0,067	0,114	0,171	0,359	0,608	0,914	1,276	1,692	2,161
2000	2,2	0,036	0,075	0,126	0,190	0,397	0,672	1,009	1,407	1,863	2,378
2200	2,5	0,039	0,082	0,139	0,208	0,436	0,735	1,103	1,537	2,035	2,594
2400	2,8	0,043	0,090	0,152	0,227	0,474	0,799	1,198	1,668	2,206	2,811
2600	3,0	0,047	0,098	0,164	0,246	0,513	0,863	1,293	1,798	2,378	3,028
2800	3,3	0,051	0,105	0,177	0,265	0,551	0,927	1,387	1,929	2,549	3,245

LZK, TZK width 138 mm / height 150, 200, 300, 400, 500, 600 mm

Length [mm]	Volume [l]	M – mass rate of flow in piping (kg/h) / R – hydraulic loss in exchanger (kPa)									
		M = 40	60	80	100	150	200	250	300	350	400
600	0,5	0,026	0,055	0,096	0,147	0,316	0,545	0,831	1,172	1,568	2,016
800	0,7	0,033	0,071	0,121	0,183	0,390	0,664	1,005	1,408	1,874	2,399
1000	0,9	0,041	0,086	0,146	0,220	0,463	0,783	1,178	1,644	2,180	2,782
1200	1,2	0,049	0,102	0,172	0,257	0,536	0,902	1,352	1,880	2,486	3,165
1400	1,2	0,057	0,118	0,197	0,294	0,609	1,021	1,525	2,116	2,791	3,549
1600	1,4	0,065	0,133	0,222	0,331	0,682	1,140	1,698	2,352	3,097	3,932
1800	1,6	0,072	0,149	0,248	0,368	0,756	1,259	1,872	2,588	3,403	4,315
2000	1,9	0,080	0,164	0,273	0,405	0,829	1,378	2,045	2,824	3,709	4,698
2200	2,1	0,088	0,180	0,298	0,442	0,902	1,497	2,219	3,060	4,015	5,081
2400	2,3	0,096	0,195	0,323	0,478	0,975	1,616	2,392	3,296	4,321	5,464
2600	2,6	0,104	0,211	0,349	0,515	1,048	1,735	2,566	3,532	4,627	5,848
2800	2,8	0,111	0,226	0,374	0,552	1,122	1,854	2,739	3,767	4,933	6,231

LZT, TZT width 138 mm / height 350 mm

Length [mm]	Volume [l]	M – mass rate of flow in piping (kg/h) / R – hydraulic loss in exchanger (kPa)									
		M = 40	60	80	100	150	200	250	300	350	400
600	0,5	0,026	0,055	0,096	0,147	0,316	0,545	0,831	1,172	1,568	2,016
800	0,7	0,033	0,071	0,121	0,183	0,390	0,664	1,005	1,408	1,874	2,399
1000	0,9	0,041	0,086	0,146	0,220	0,463	0,783	1,178	1,644	2,180	2,782
1200	1,2	0,049	0,102	0,172	0,257	0,536	0,902	1,352	1,880	2,486	3,165
1400	1,2	0,057	0,118	0,197	0,294	0,609	1,021	1,525	2,116	2,791	3,549
1600	1,4	0,065	0,133	0,222	0,331	0,682	1,140	1,698	2,352	3,097	3,932
1800	1,6	0,072	0,149	0,248	0,368	0,756	1,259	1,872	2,588	3,403	4,315
2000	1,9	0,080	0,164	0,273	0,405	0,829	1,378	2,045	2,824	3,709	4,698
2200	2,1	0,088	0,180	0,298	0,442	0,902	1,497	2,219	3,060	4,015	5,081
2400	2,3	0,096	0,195	0,323	0,478	0,975	1,616	2,392	3,296	4,321	5,464
2600	2,6	0,104	0,211	0,349	0,515	1,048	1,735	2,566	3,532	4,627	5,848
2800	2,8	0,111	0,226	0,374	0,552	1,122	1,854	2,739	3,767	4,933	6,231

LZK, TZK width 198 mm / height 150, 200, 300, 400, 500, 600 mm

Length [mm]	Volume [l]	M – mass rate of flow in piping (kg/h) / R – hydraulic loss in exchanger (kPa)									
		M = 40	60	80	100	150	200	250	300	350	400
600	0,8	0,050	0,104	0,174	0,259	0,537	0,898	1,341	1,859	2,452	3,115
800	1,2	0,063	0,130	0,216	0,321	0,659	1,096	1,628	2,250	2,956	3,746
1000	1,6	0,077	0,157	0,259	0,383	0,781	1,295	1,916	2,639	3,461	4,377
1200	2,0	0,090	0,183	0,302	0,446	0,904	1,493	2,204	3,030	3,966	5,008
1400	2,3	0,104	0,210	0,345	0,508	1,026	1,691	2,491	3,420	4,471	5,639
1600	2,7	0,117	0,236	0,388	0,570	1,149	1,889	2,779	3,810	4,976	6,270
1800	3,1	0,131	0,263	0,430	0,632	1,271	2,087	3,067	4,200	5,481	6,901
2000	3,5	0,144	0,289	0,473	0,694	1,394	2,285	3,354	4,590	5,985	7,533
2200	3,9	0,158	0,315	0,516	0,757	1,516	2,483	3,642	4,980	6,490	8,164
2400	4,3	0,171	0,342	0,559	0,818	1,638	2,681	3,929	5,371	6,995	8,795
2600	4,7	0,184	0,368	0,602	0,881	1,761	2,879	4,217	5,760	7,500	9,426
2800	5,1	0,198	0,395	0,645	0,943	1,883	3,077	4,505	6,151	8,004	10,057

LZT, TZT width 198 mm / height 350 mm

Length [mm]	Volume [l]	M – mass rate of flow in piping (kg/h) / R – hydraulic loss in exchanger (kPa)									
		M = 40	60	80	100	150	200	250	300	350	400
600	0,8	0,050	0,104	0,174	0,259	0,537	0,898	1,341	1,859	2,452	3,115
800	1,2	0,063	0,130	0,216	0,321	0,659	1,096	1,628	2,250	2,956	3,746
1000	1,6	0,077	0,157	0,259	0,383	0,781	1,295	1,916	2,639	3,461	4,377
1200	2,0	0,090	0,183	0,302	0,446	0,904	1,493	2,204	3,030	3,966	5,008
1400	2,3	0,104	0,210	0,345	0,508	1,026	1,691	2,491	3,420	4,471	5,639
1600	2,7	0,117	0,236	0,388	0,570	1,149	1,889	2,779	3,810	4,976	6,270
1800	3,1	0,131	0,263	0,430	0,632	1,271	2,087	3,067	4,200	5,481	6,901
2000	3,5	0,144	0,289	0,473	0,694	1,394	2,285	3,354	4,590	5,985	7,533
2200	3,9	0,158	0,315	0,516	0,757	1,516	2,483	3,642	4,980	6,490	8,164
2400	4,3	0,171	0,342	0,559	0,818	1,638	2,681	3,929	5,371	6,995	8,795
2600	4,7	0,184	0,368	0,602	0,881	1,761	2,879	4,217	5,760	7,500	9,426
2800	5,1	0,198	0,395	0,645	0,943	1,883	3,077	4,505	6,151	8,004	10,057

LZK, TZK width 258 mm / height 150, 200, 300, 400, 500, 600 mm

Length [mm]	Volume [l]	M – mass rate of flow in piping (kg/h) / R – hydraulic loss in exchanger (kPa)									
		M = 40	60	80	100	150	200	250	300	350	400
600	1,1	0,074	0,151	0,250	0,371	0,758	1,256	1,859	2,561	3,357	4,243
800	1,6	0,093	0,188	0,312	0,459	0,932	1,536	2,264	3,108	4,062	5,122
1000	2,2	0,113	0,228	0,373	0,549	1,105	1,817	2,670	3,655	4,767	6,001
1200	2,7	0,132	0,265	0,436	0,639	1,281	2,097	3,075	4,202	5,472	6,880
1400	3,3	0,152	0,305	0,497	0,728	1,454	2,377	3,479	4,750	6,178	7,759
1600	3,8	0,171	0,342	0,559	0,817	1,630	2,658	3,885	5,296	6,884	8,638
1800	4,3	0,192	0,382	0,620	0,906	1,803	2,938	4,290	5,844	7,590	9,517
2000	4,9	0,210	0,419	0,683	0,996	1,979	3,219	4,694	6,390	8,295	10,396
2200	5,4	0,231	0,457	0,744	1,086	2,152	3,499	5,100	6,938	9,000	11,275
2400	6,0	0,251	0,496	0,806	1,174	2,326	3,779	5,505	7,485	9,705	12,154
2600	6,5	0,270	0,534	0,868	1,264	2,501	4,059	5,910	8,032	10,411	13,033
2800	7,1	0,290	0,573	0,930	1,353	2,675	4,339	6,315	8,579	11,116	13,912

Pressure loss for wall-mounted models

LSK, TSK width 82 mm / height 200, 300 mm

Length [mm]	Volume [l]	M – mass rate of flow in piping (kg/h) / R – hydraulic loss in exchanger (kPa)									
		M = 40	60	80	100	150	200	250	300	350	400
600	0,3	0,015	0,033	0,059	0,092	0,205	0,362	0,563	0,807	1,094	1,423
800	0,5	0,019	0,042	0,073	0,113	0,249	0,437	0,674	0,962	1,298	1,683
1000	0,6	0,023	0,050	0,088	0,135	0,294	0,511	0,786	1,116	1,502	1,942
1200	0,8	0,027	0,059	0,102	0,156	0,338	0,586	0,897	1,271	1,706	2,201
1400	0,8	0,031	0,067	0,116	0,177	0,383	0,661	1,009	1,425	1,910	2,460
1600	0,9	0,035	0,076	0,131	0,199	0,427	0,735	1,120	1,580	2,114	2,719
1800	1,1	0,039	0,084	0,145	0,220	0,472	0,810	1,232	1,735	2,317	2,978
2000	1,2	0,044	0,093	0,159	0,242	0,516	0,884	1,343	1,889	2,521	3,238
2200	1,4	0,048	0,102	0,174	0,263	0,561	0,959	1,454	2,044	2,725	3,497
2400	1,6	0,052	0,110	0,188	0,285	0,605	1,034	1,566	2,199	2,929	3,756
2600	1,7	0,056	0,119	0,202	0,306	0,650	1,108	1,677	2,353	3,133	4,015
2800	1,9	0,060	0,127	0,217	0,328	0,694	1,183	1,789	2,508	3,337	4,274

LSK, TSK width 82 mm / height 400, 500, 600 mm

Length [mm]	Volume [l]	M – mass rate of flow in piping (kg/h) / R – hydraulic loss in exchanger (kPa)									
		M = 40	60	80	100	150	200	250	300	350	400
600	0,6	0,037	0,079	0,134	0,202	0,427	0,724	1,091	1,525	2,022	2,582
800	0,9	0,048	0,100	0,169	0,253	0,526	0,885	1,324	1,839	2,429	3,089
1000	1,2	0,059	0,122	0,204	0,304	0,626	1,045	1,556	2,154	2,835	3,597
1200	1,6	0,070	0,144	0,239	0,354	0,725	1,206	1,789	2,469	3,241	4,104
1400	1,6	0,081	0,165	0,274	0,405	0,825	1,366	2,021	2,783	3,648	4,611
1600	1,9	0,092	0,187	0,309	0,456	0,924	1,527	2,254	3,098	4,054	5,118
1800	2,2	0,103	0,209	0,344	0,507	1,024	1,687	2,486	3,413	4,460	5,625
2000	2,5	0,114	0,230	0,379	0,557	1,124	1,848	2,719	3,727	4,867	6,132
2200	2,8	0,125	0,252	0,414	0,608	1,223	2,009	2,951	4,042	5,273	6,639
2400	3,1	0,136	0,274	0,449	0,659	1,323	2,169	3,184	4,357	5,680	7,147
2600	3,4	0,147	0,295	0,484	0,709	1,422	2,330	3,416	4,671	6,086	7,654
2800	3,7	0,159	0,317	0,519	0,760	1,522	2,490	3,649	4,986	6,492	8,161

LSK, TSK width 122 mm / height 165, 200, 300, 400, 500, 600 mm

Length [mm]	Volume [l]	M – mass rate of flow in piping (kg/h) / R – hydraulic loss in exchanger (kPa)									
		M = 40	60	80	100	150	200	250	300	350	400
600	0,5	0,026	0,055	0,096	0,147	0,316	0,545	0,831	1,172	1,568	2,016
800	0,7	0,033	0,071	0,121	0,183	0,390	0,664	1,005	1,408	1,874	2,399
1000	0,9	0,041	0,086	0,146	0,220	0,463	0,783	1,178	1,644	2,180	2,782
1200	1,2	0,049	0,102	0,172	0,257	0,536	0,902	1,352	1,880	2,486	3,165
1400	1,2	0,057	0,118	0,197	0,294	0,609	1,021	1,525	2,116	2,791	3,549
1600	1,4	0,065	0,133	0,222	0,331	0,682	1,140	1,698	2,352	3,097	3,932
1800	1,6	0,072	0,149	0,248	0,368	0,756	1,259	1,872	2,588	3,403	4,315
2000	1,9	0,080	0,164	0,273	0,405	0,829	1,378	2,045	2,824	3,709	4,698
2200	2,1	0,088	0,180	0,298	0,442	0,902	1,497	2,219	3,060	4,015	5,081
2400	2,3	0,096	0,195	0,323	0,478	0,975	1,616	2,392	3,296	4,321	5,464
2600	2,6	0,104	0,211	0,349	0,515	1,048	1,735	2,566	3,532	4,627	5,848
2800	2,8	0,111	0,226	0,374	0,552	1,122	1,854	2,739	3,767	4,933	6,231

LST, TST width 122 mm / height 500, 600 mm

Length [mm]	Volume [l]	M – mass rate of flow in piping (kg/h) / R – hydraulic loss in exchanger (kPa)									
		M = 40	60	80	100	150	200	250	300	350	400
600	0,5	0,026	0,055	0,096	0,147	0,316	0,545	0,831	1,172	1,568	2,016
800	0,7	0,033	0,071	0,121	0,183	0,390	0,664	1,005	1,408	1,874	2,399
1000	0,9	0,041	0,086	0,146	0,220	0,463	0,783	1,178	1,644	2,180	2,782
1200	1,2	0,049	0,102	0,172	0,257	0,536	0,902	1,352	1,880	2,486	3,165
1400	1,2	0,057	0,118	0,197	0,294	0,609	1,021	1,525	2,116	2,791	3,549
1600	1,4	0,065	0,133	0,222	0,331	0,682	1,140	1,698	2,352	3,097	3,932
1800	1,6	0,072	0,149	0,248	0,368	0,756	1,259	1,872	2,588	3,403	4,315
2000	1,9	0,080	0,164	0,273	0,405	0,829	1,378	2,045	2,824	3,709	4,698
2200	2,1	0,088	0,180	0,298	0,442	0,902	1,497	2,219	3,060	4,015	5,081
2400	2,3	0,096	0,195	0,323	0,478	0,975	1,616	2,392	3,296	4,321	5,464
2600	2,6	0,104	0,211	0,349	0,515	1,048	1,735	2,566	3,532	4,627	5,848
2800	2,8	0,111	0,226	0,374	0,552	1,122	1,854	2,739	3,767	4,933	6,231

LSK, TSK width 182 mm / height 165, 200, 300, 400, 500, 600 mm

Length [mm]	Volume [l]	M – mass rate of flow in piping (kg/h) / R – hydraulic loss in exchanger (kPa)									
		M = 40	60	80	100	150	200	250	300	350	400
600	0,8	0,050	0,104	0,174	0,259	0,537	0,898	1,341	1,859	2,452	3,115
800	1,2	0,063	0,130	0,216	0,321	0,659	1,096	1,628	2,250	2,956	3,746
1000	1,6	0,077	0,157	0,259	0,383	0,781	1,295	1,916	2,639	3,461	4,377
1200	2,0	0,090	0,183	0,302	0,446	0,904	1,493	2,204	3,030	3,966	5,008
1400	2,3	0,104	0,210	0,345	0,508	1,026	1,691	2,491	3,420	4,471	5,639
1600	2,7	0,117	0,236	0,388	0,570	1,149	1,889	2,779	3,810	4,976	6,270
1800	3,1	0,131	0,263	0,430	0,632	1,271	2,087	3,067	4,200	5,481	6,901
2000	3,5	0,144	0,289	0,473	0,694	1,394	2,285	3,354	4,590	5,985	7,533
2200	3,9	0,158	0,315	0,516	0,757	1,516	2,483	3,642	4,980	6,490	8,164
2400	4,3	0,171	0,342	0,559	0,818	1,638	2,681	3,929	5,371	6,995	8,795
2600	4,7	0,184	0,368	0,602	0,881	1,761	2,879	4,217	5,760	7,500	9,426
2800	5,1	0,198	0,395	0,645	0,943	1,883	3,077	4,505	6,151	8,004	10,057

LST, TST width 182 mm / height 500, 600 mm

Length [mm]	Volume [l]	M – mass rate of flow in piping (kg/h) / R – hydraulic loss in exchanger (kPa)									
		M = 40	60	80	100	150	200	250	300	350	400
600	0,8	0,050	0,104	0,174	0,259	0,537	0,898	1,341	1,859	2,452	3,115
800	1,2	0,063	0,130	0,216	0,321	0,659	1,096	1,628	2,250	2,956	3,746
1000	1,6	0,077	0,157	0,259	0,383	0,781	1,295	1,916	2,639	3,461	4,377
1200	2,0	0,090	0,183	0,302	0,446	0,904	1,493	2,204	3,030	3,966	5,008
1400	2,3	0,104	0,210	0,345	0,508	1,026	1,691	2,491	3,420	4,471	5,639
1600	2,7	0,117	0,236	0,388	0,570	1,149	1,889	2,779	3,810	4,976	6,270
1800	3,1	0,131	0,263	0,430	0,632	1,271	2,087	3,067	4,200	5,481	6,901
2000	3,5	0,144	0,289	0,473	0,694	1,394	2,285	3,354	4,590	5,985	7,533
2200	3,9	0,158	0,315	0,516	0,757	1,516	2,483	3,642	4,980	6,490	8,164
2400	4,3	0,171	0,342	0,559	0,818	1,638	2,681	3,929	5,371	6,995	8,795
2600	4,7	0,184	0,368	0,602	0,881	1,761	2,879	4,217	5,760	7,500	9,426
2800	5,1	0,198	0,395	0,645	0,943	1,883	3,077	4,505	6,151	8,004	10,057

LZK, TZK width 258 mm / height 150, 200, 300, 400, 500, 600 mm

Length [mm]	Volume [l]	M – mass rate of flow in piping (kg/h) / R – hydraulic loss in exchanger (kPa)									
		M = 40	60	80	100	150	200	250	300	350	400
600	1,1	0,074	0,151	0,250	0,371	0,758	1,256	1,859	2,561	3,357	4,243
800	1,6	0,093	0,188	0,312	0,459	0,932	1,536	2,264	3,108	4,062	5,122
1000	2,2	0,113	0,228	0,373	0,549	1,105	1,817	2,670	3,655	4,767	6,001
1200	2,7	0,132	0,265	0,436	0,639	1,281	2,097	3,075	4,202	5,472	6,880
1400	3,3	0,152	0,305	0,497	0,728	1,454	2,377	3,479	4,750	6,178	7,759
1600	3,8	0,171	0,342	0,559	0,817	1,630	2,658	3,885	5,296	6,884	8,638
1800	4,3	0,192	0,382	0,620	0,906	1,803	2,938	4,290	5,844	7,590	9,517
2000	4,9	0,210	0,419	0,683	0,996	1,979	3,219	4,694	6,390	8,295	10,396
2200	5,4	0,231	0,457	0,744	1,086	2,152	3,499	5,100	6,938	9,000	11,275
2400	6,0	0,251	0,496	0,806	1,174	2,326	3,779	5,505	7,485	9,705	12,154
2600	6,5	0,270	0,534	0,868	1,264	2,501	4,059	5,910	8,032	10,411	13,033
2800	7,1	0,290	0,573	0,930	1,353	2,675	4,339	6,315	8,579	11,116	13,912

Electrical diagram

SCHEME 1 - basic connection

Note

- The voltage must not drop below 22 V DC, it is necessary to size the cross section of conductors correctly according to the calculation SW.
- If more than 10 electrothermal actuators are used it is necessary to use the switching relay (see SCHEME 2).
- If the capacity of the switching source is insufficient use more power supplies (see SCHEME 3).

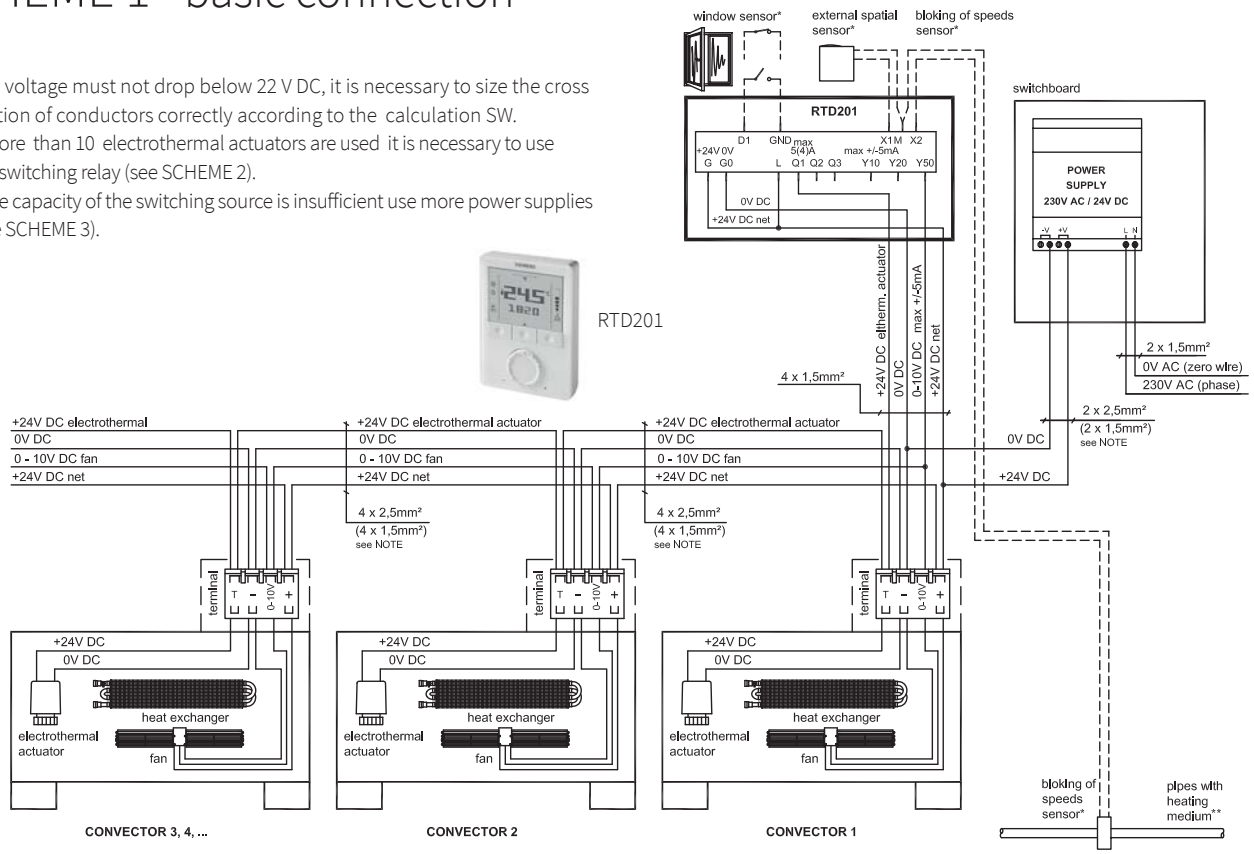

* accessories / ** The temperature sensor (block of revs) must be fixed on the tube, through which the heating medium freely flows and which is not closed by the actuator.

SCHEME 2 - connection with more than 10pcs of electrothermal actuator

Note

- The voltage must not drop below 22 V DC, it is necessary to size the cross section of conductors correctly according to the calculation SW.
- If the capacity of the switching source is insufficient use more power supplies (see SCHEME 3).

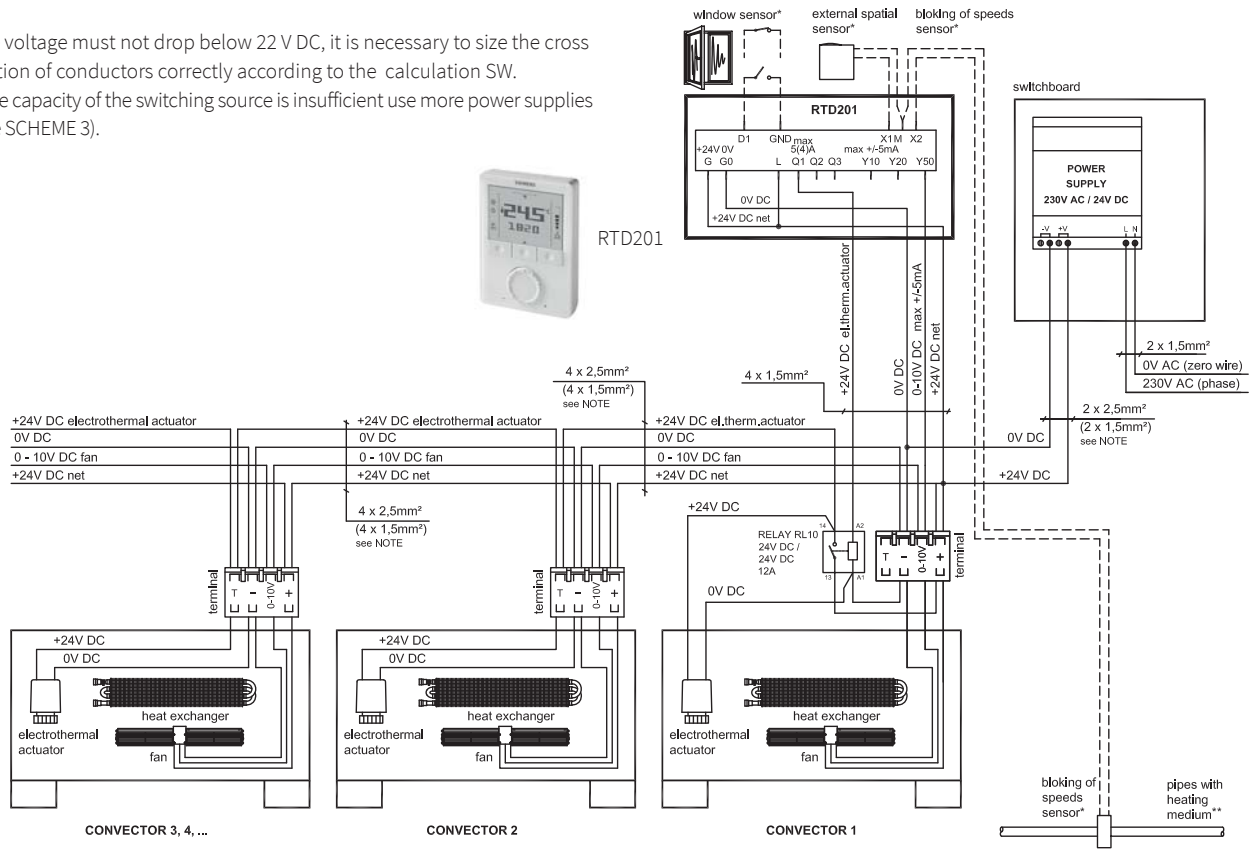

* accessories / ** The temperature sensor (block of revs) must be fixed on the tube, through which the heating medium freely flows and which is not closed by the actuator.

Electrical diagram

SCHEME 3 - connection with more supplies

Note

- The voltage must not drop below 22 V DC, it is necessary to size the cross section of conductors correctly according to the calculation SW.
- If more than 10 electrothermal actuators are used it is necessary to use the switching relay (see SCHEME 2).
- All sources shall be powered from a single circuit breaker.

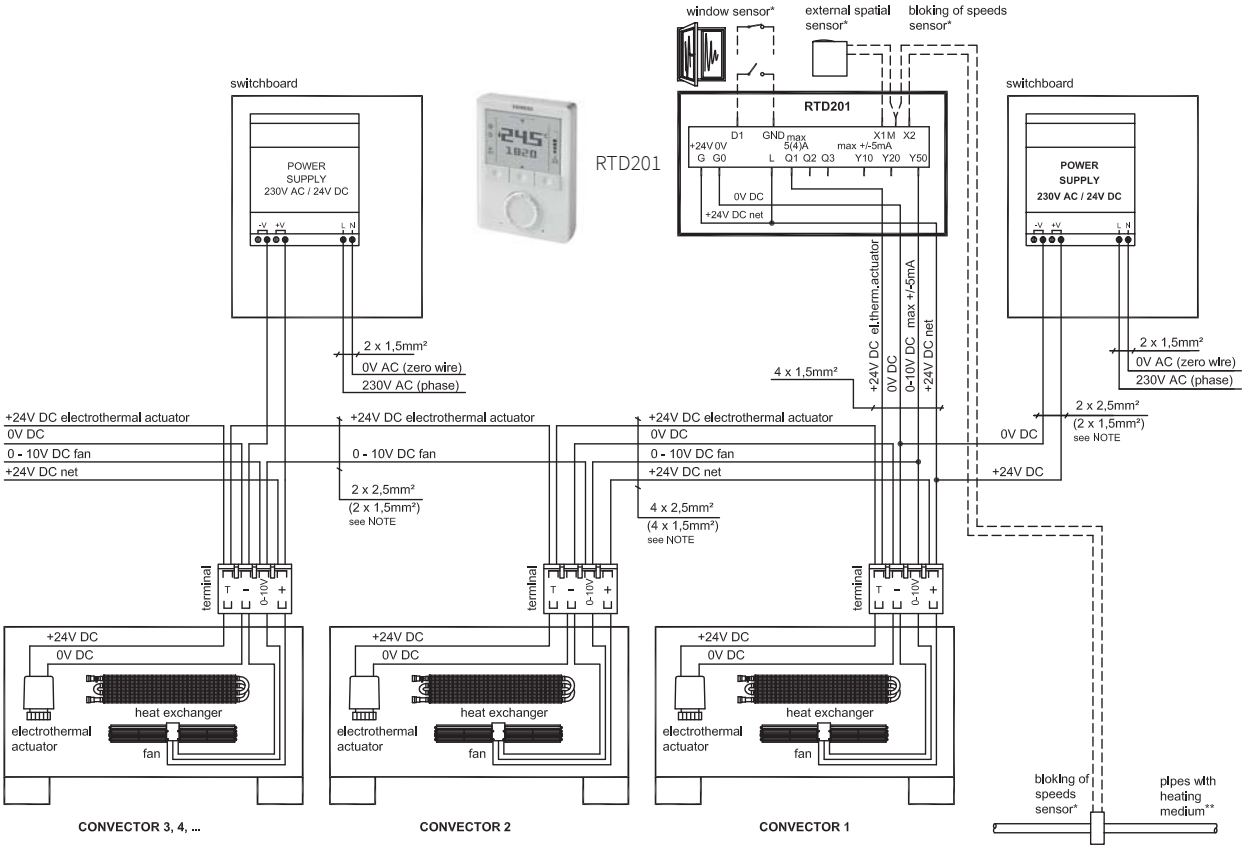

* accessories / ** The temperature sensor (block of revs) must be fixed on the tube, through which the heating medium freely flows and which is not closed by the actuator.

Acoustics

When planning fan-operated convectors fan for residential rooms it is necessary to take into account the acoustic characteristics of the convector and the environment in which it will be used. It is necessary to design a convector complying with the applicable standard, which defines acoustic limits for individual environments. The values are prescribed by a national directive, which shall be observed – there may be differences in individual EU states. In general one can say that the upper limit for a daily room is 40 dB(A), the limit for rooms with night or relaxation regime is lowered to 30 dB(A), the limit for offices is 50 dB(A) and so on.

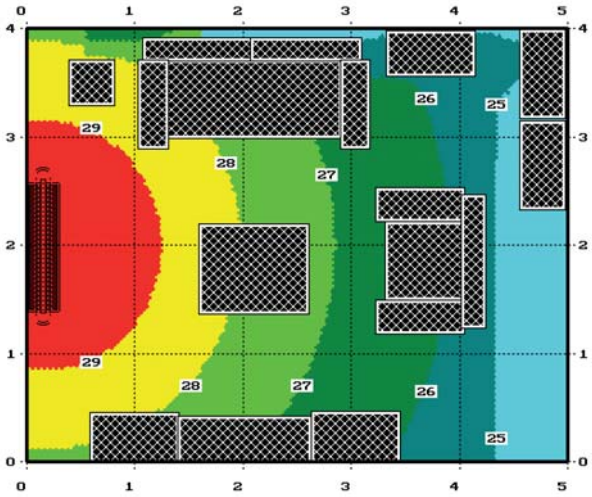

Different requirements for different rooms

- entrance halls, corridors, waiting rooms, foyers
- office space, administrative rooms
- residential rooms, public buildings, car showrooms, shops
- rooms for relaxation and rest (residential rooms, bedrooms)

Acoustic parameters in the catalogue

The acoustic parameters specified in the Ecolite catalogue for individual products are valid for residential space "with standard equipment". This means that the room is equipped in the standard way. Curtains, drapes, possibly Venetian blinds are fitted at windows, the floor or a part thereof is covered with a carpet, furniture is present. All these elements absorb or dissipate acoustic waves in the room.

Changes and the influence on acoustic pressure

The type of space for which we design the Ecolite fan-operated convectors has fundamental influence on the total noise level of the environment connected with its operation. Reverberation occurs, resounding waves take relatively long time to die down (they are not absorbed), they mutually influence and magnify each other. The total level of acoustic pressure can be increased by as much as 3-6 dB(A).

View of the testing acoustic chamber

- The undesirable effect of acoustic pressure is increased by convectors installed near corners or under ceiling without cover.
- rooms with minimalistic equipment without dampening elements and with a resounding floor without any cover have significant impact on the worsening of the total acoustics of the space. From the viewpoint of the assessment of the acoustic limit the influence of the room (with or without equipment) is not taken into consideration, the regulation assesses the fitness of the room in its current condition (at the time of measuring). In practice an empty room may be measured. Therefore the designer of the heating system shall take into account all possible variants of installation into a given space or he/she may draw the investor's attention to available solutions using an alternative (more powerful, less noisy) convector in atypical cases.
- it is important to take into consideration acoustic parameters when installing more convector in a single room. Acoustic pressures of individual convectors mutually influence one another, resulting in an increase of the total noise level. It all depends on the type of the room, the characteristics of the convector and the distance between individual bodies. It is necessary to design heating bodies with a sufficiently low level of acoustic pressure at the selected output and the revs of the fan.

The designer shall take into account all aspects of the room in which the convector is to be installed.
(i.e. the equipment, dampening elements, floating or double-layer floor etc.)

Measuring the acoustic pressure

The measuring took place in semi-anechoic chamber. The acoustic chamber complies with ISO 3745 standard in terms of frequency range 100 Hz to 20 kHz. An accurate Brüel and Kjaer phonometer was used for measuring which complies with 1st category of measuring accuracy. The measuring methodology is based on the recommendations specified in the Methodology manual for noise measuring and assessment in non-working environment. Sensing device was placed diagonally one meter above the convector and 1 meter from the convector into the room. The values were adjusted to the conditions of a room with „standard equipment" with standard reverberation and reflectance.

Orientation colour card

colour series	**RAL9016**	
shade	snow white	
finish	-	
order code	01	
colour series	**RAL9010**	
shade	white	
finish	-	
order code	02	
colour series	**RAL9001**	
shade	ivory	
finish	-	
order code	04	
colour series	**RAL9015**	
shade	jasmine	
finish	-	
order code	12	
colour series	**S09**	
shade	snow white	
finish	structure	
order code	68	
colour series	**S08**	
shade	ivory	
finish	structure	
order code	67	
colour series	**S07**	
shade	bamboo	
finish	-	
order code	66	
colour series	**S06**	
shade	sunbeam	
finish	structure	
order code	65	
colour series	**S04**	
shade	gold	
finish	metallic paint	
order code	63	
colour series	**S18**	
shade	curry	
finish	structure	
order code	77	
colour series	**S16**	
shade	chilli	
finish	-	
order code	75	
colour series	**S17**	
shade	burnt brick	
finish	structure	
order code	76	
colour series	**S13**	
shade	sandstone	
finish	structure	
order code	72	
colour series	**S14**	
shade	cane	
finish	structure	
order code	73	
colour series	**RAL6019**	
shade	pistachio	
finish	-	
order code	45	
colour series	**S12**	
shade	ice	
finish	structure	
order code	71	
colour series	**S11**	
shade	sky	
finish	-	
order code	70	
colour series	**S15**	
shade	steel blue	
finish	-	
order code	74	
colour series	**S01**	
shade	aluminum	
finish	metallic	
order code	60	
colour series	**S03**	
shade	copper	
finish	metallic	
order code	62	
colour series	**S19**	
shade	brass	
finish	-	
order code	83	
colour series	**RAL7024**	
shade	grey	
finish	-	
order code	39	
colour series	**S05**	
shade	silver	
finish	metallic	
order code	64	
colour series	**RAL9006**	
shade	metal	
finish	-	
order code	20	
colour series	**S02**	
shade	anthracite	
finish	metallic	
order code	61	
colour series	**RAL8017**	
shade	chocolate	
finish	-	
order code	46	
colour series	**S10**	
shade	slate	
finish	structure	
order code	69	
colour series	**RAL9005**	
shade	black	
finish	-	
order code	19	

Brenner
RADIATORER APS

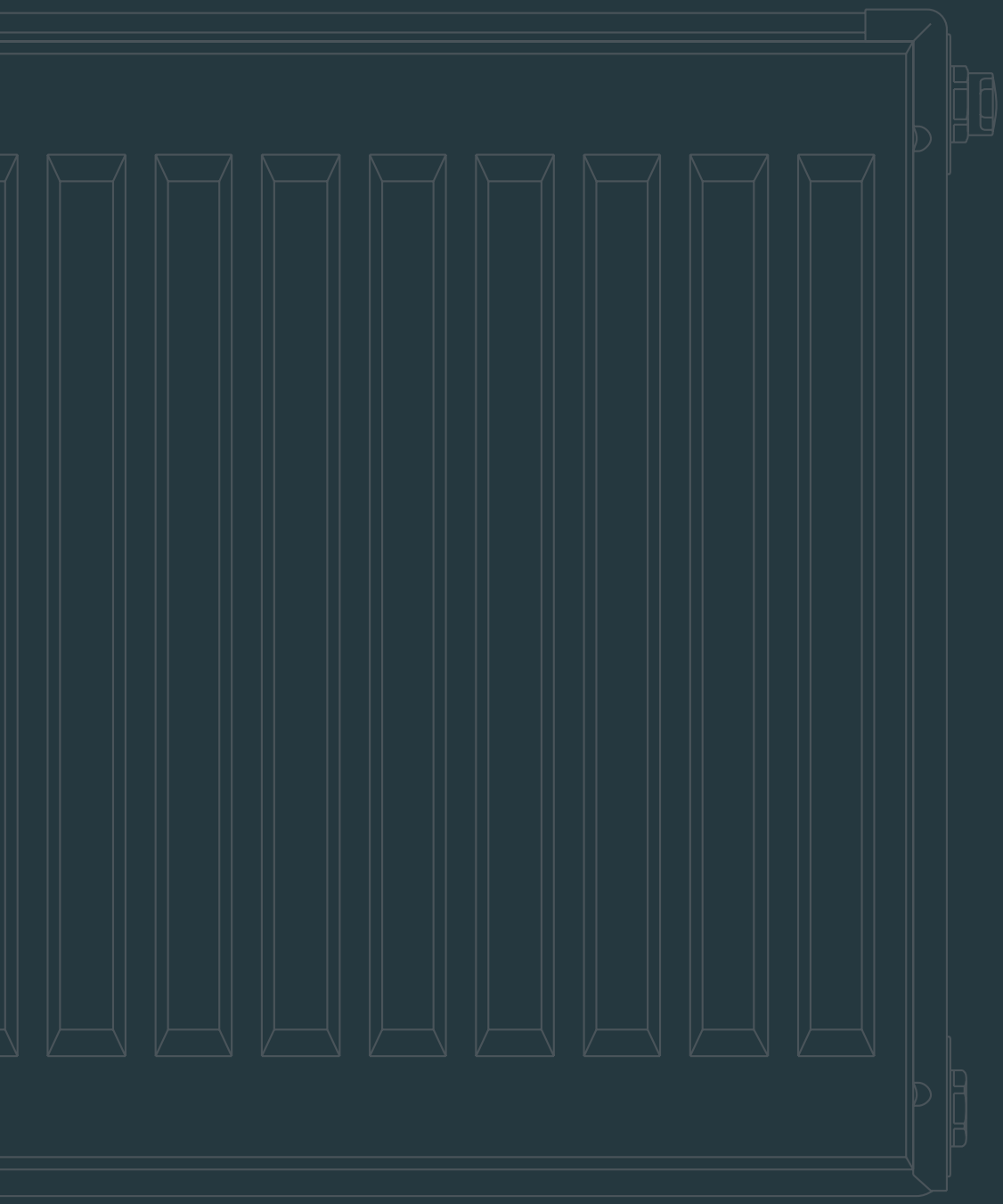

Jylland:
Hornbjergvej 51
8543 Hornslet
Tlf.: 8699 6600
jyl@brenner.dk

Fyn:
Fåborgvej 248 B
5250 Odense SV
Tlf. 4110 6600
fyn@brenner.dk

Sjælland:
Jernholmen 40 A-B
2650 Hvidovre
Tlf. 3678 6600
sj@brenner.dk

www.brenner.dk